Dimensional drawings

Dimensional Drawings

FTXC20-35B

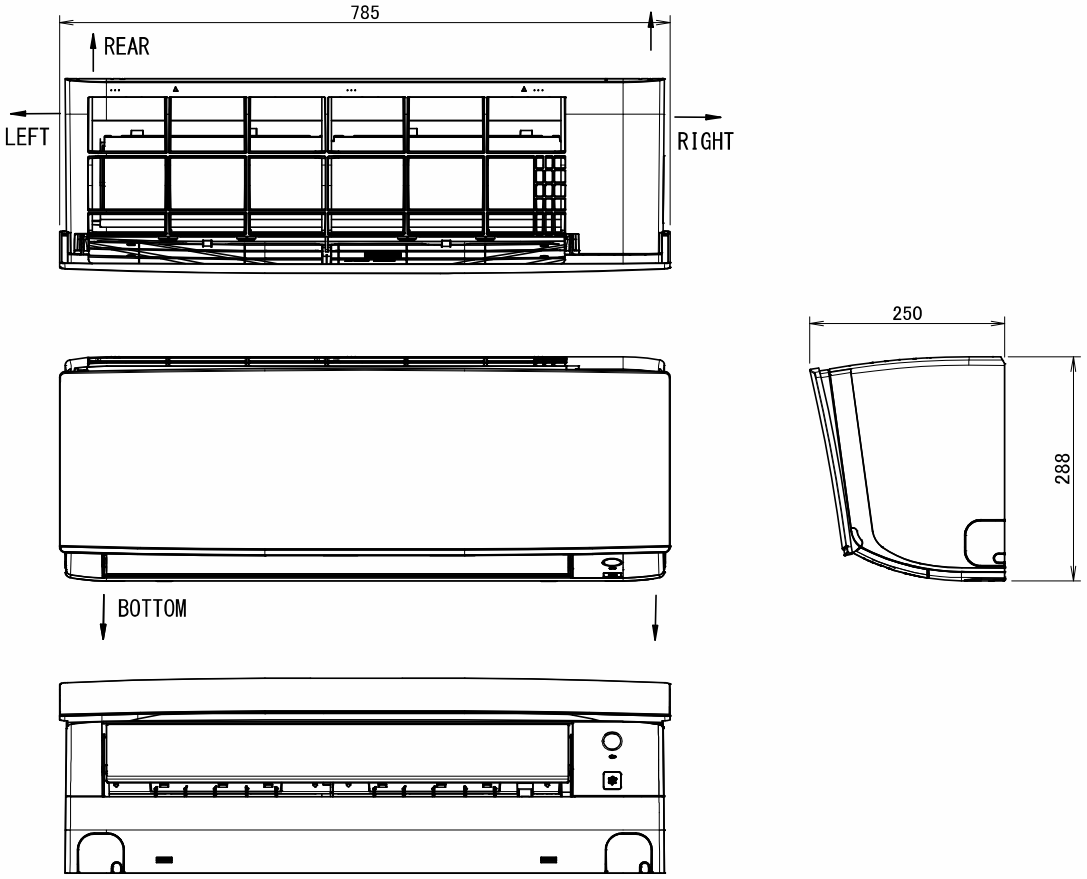

3D120120

FTXC60-71B

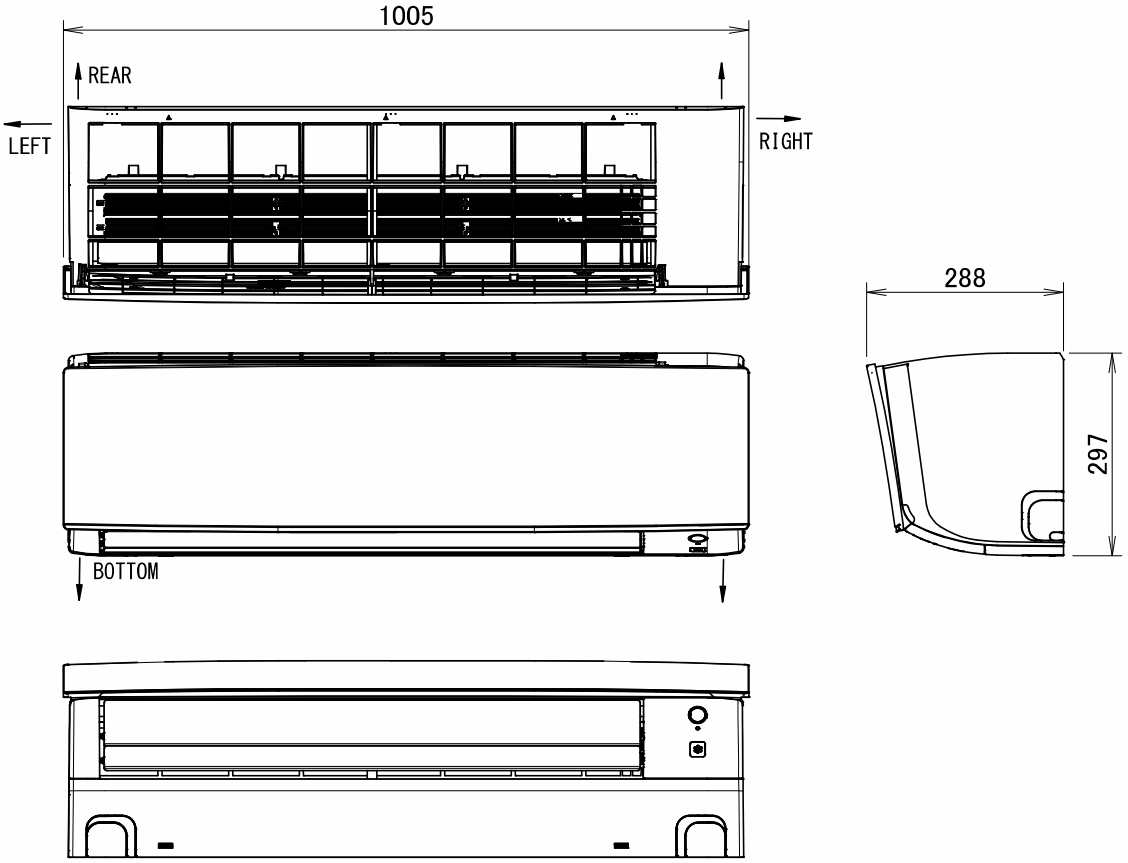

3D120315